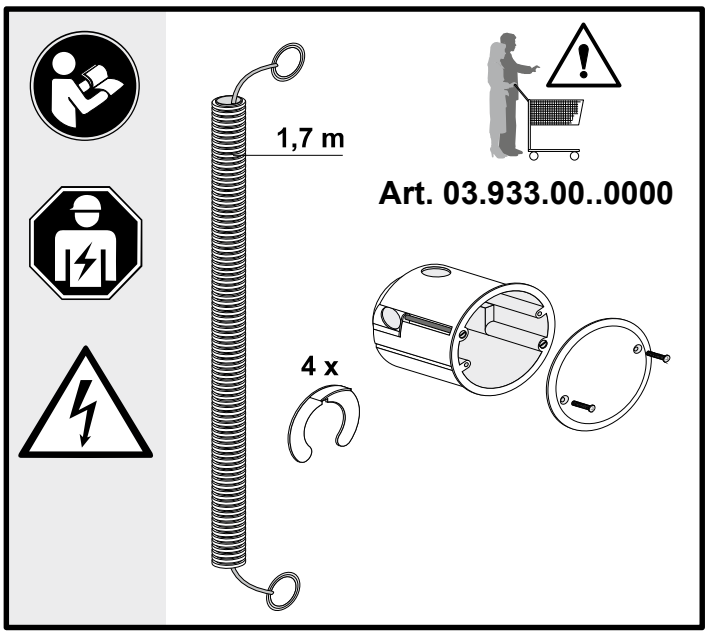
1,7 m
Art. 03.933.00..0000
4 x

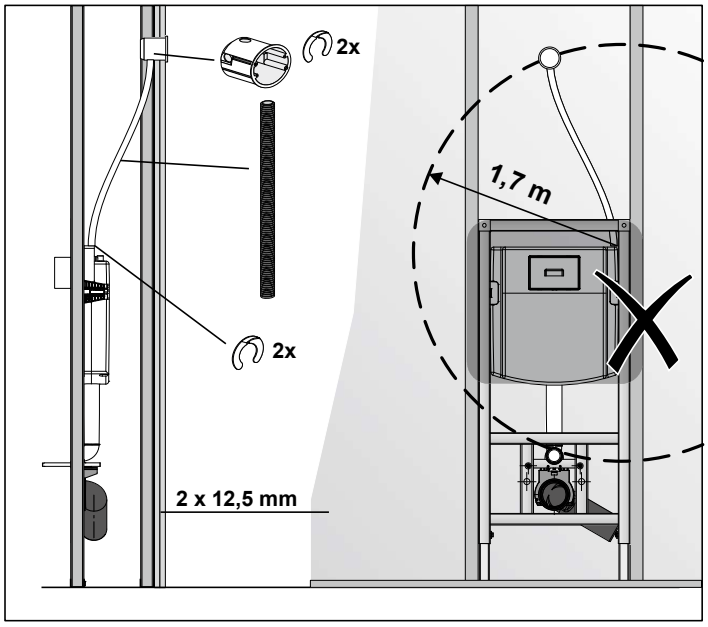
2x
1,7 m
2x
2 x 12,5 mm

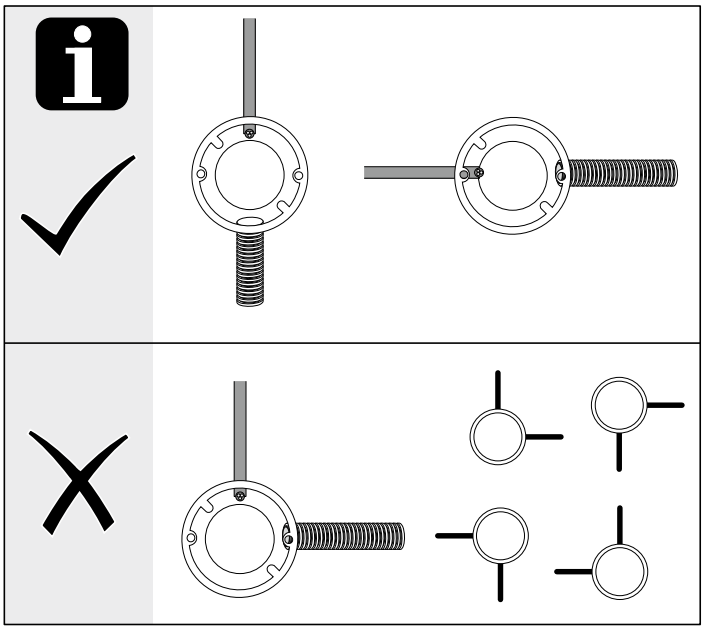

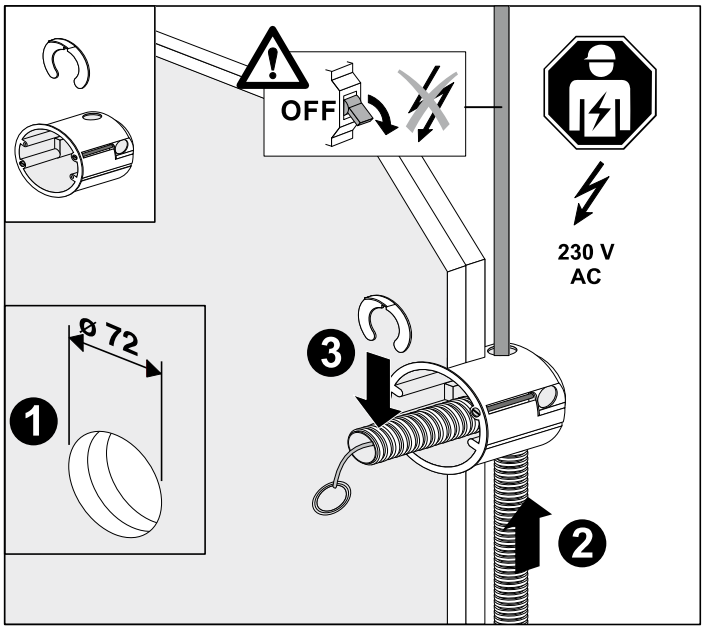
OFF
230 V
AC
ø 72
1
2
3

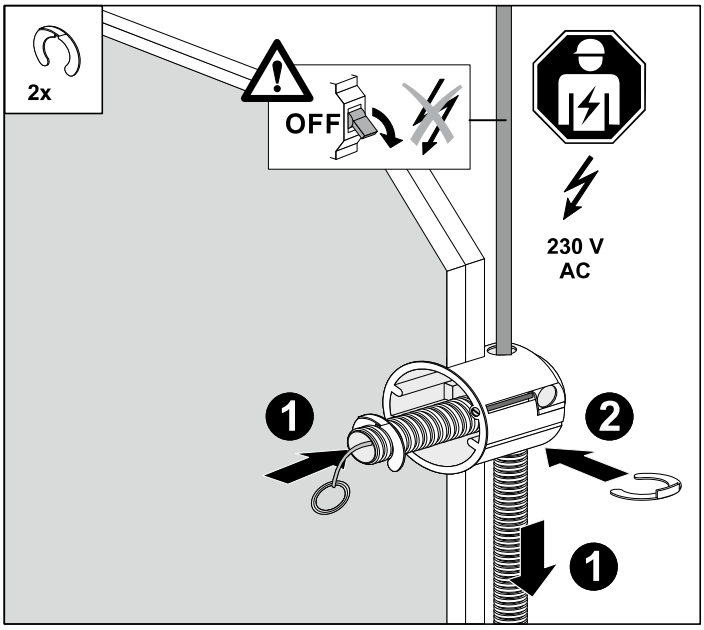
2x
OFF
230 V
AC
1
2
1

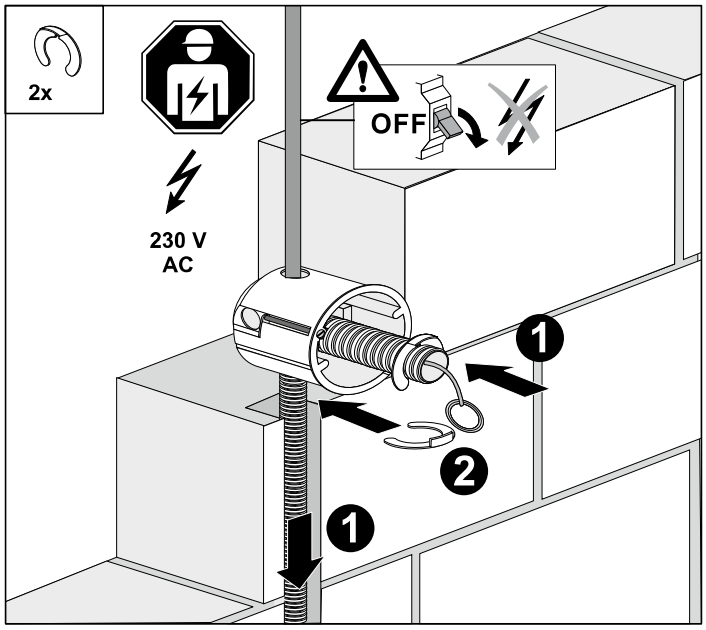
2x
OFF
230 V
AC
1
2
1

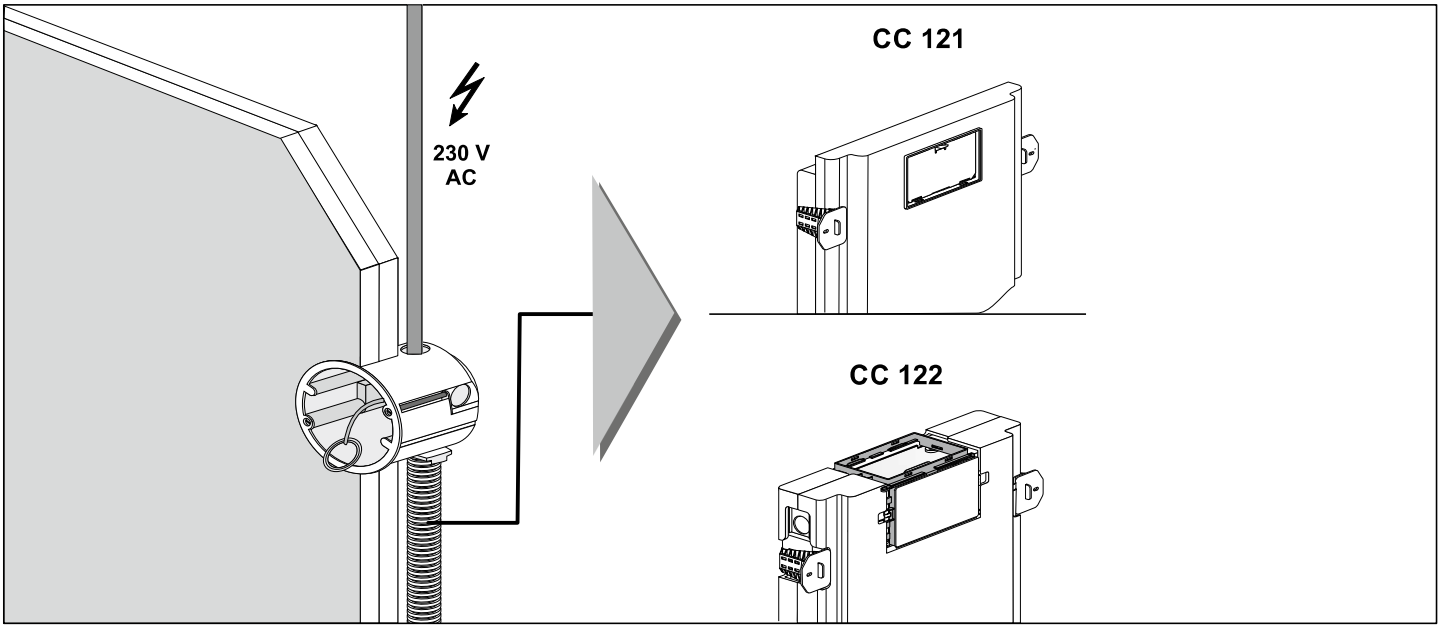
230 V
AC
CC 121
CC 122

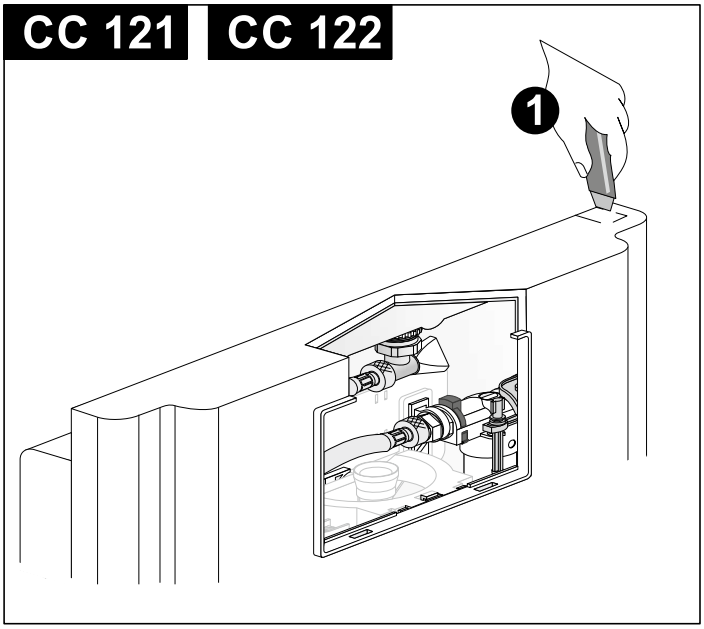
CC 121
CC 122
1

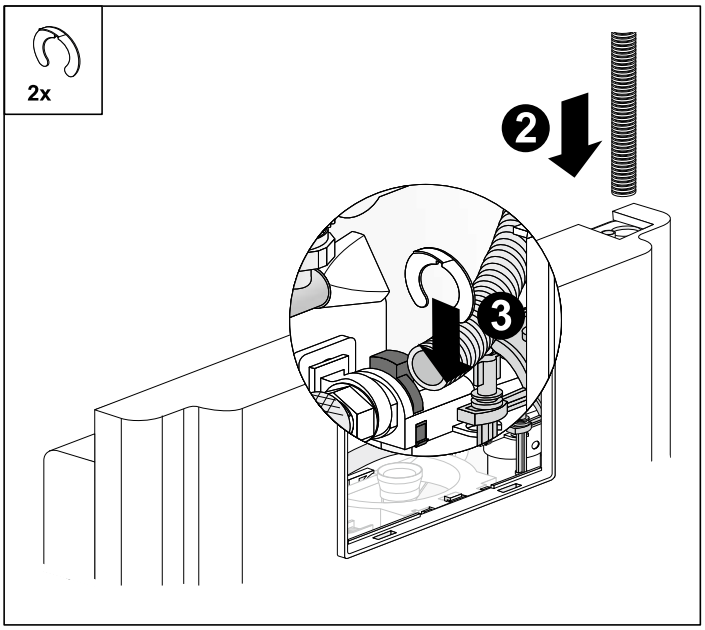
2x
2
3

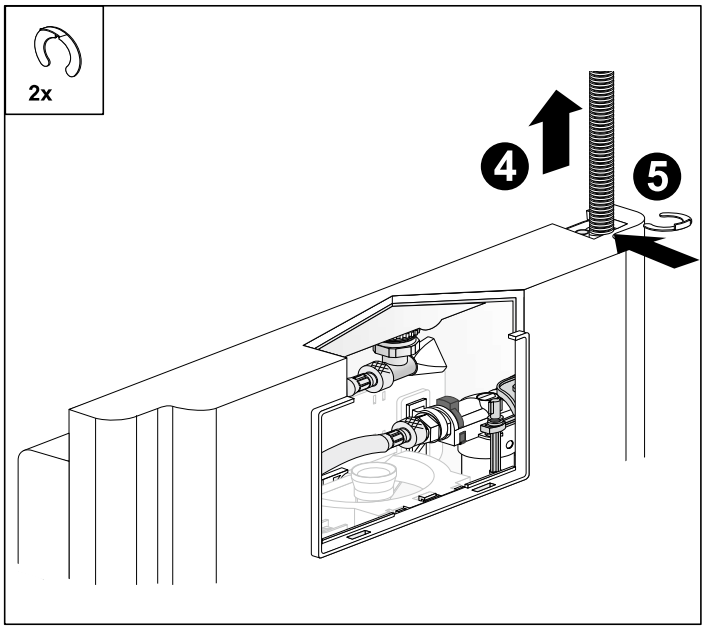
2x
4
5

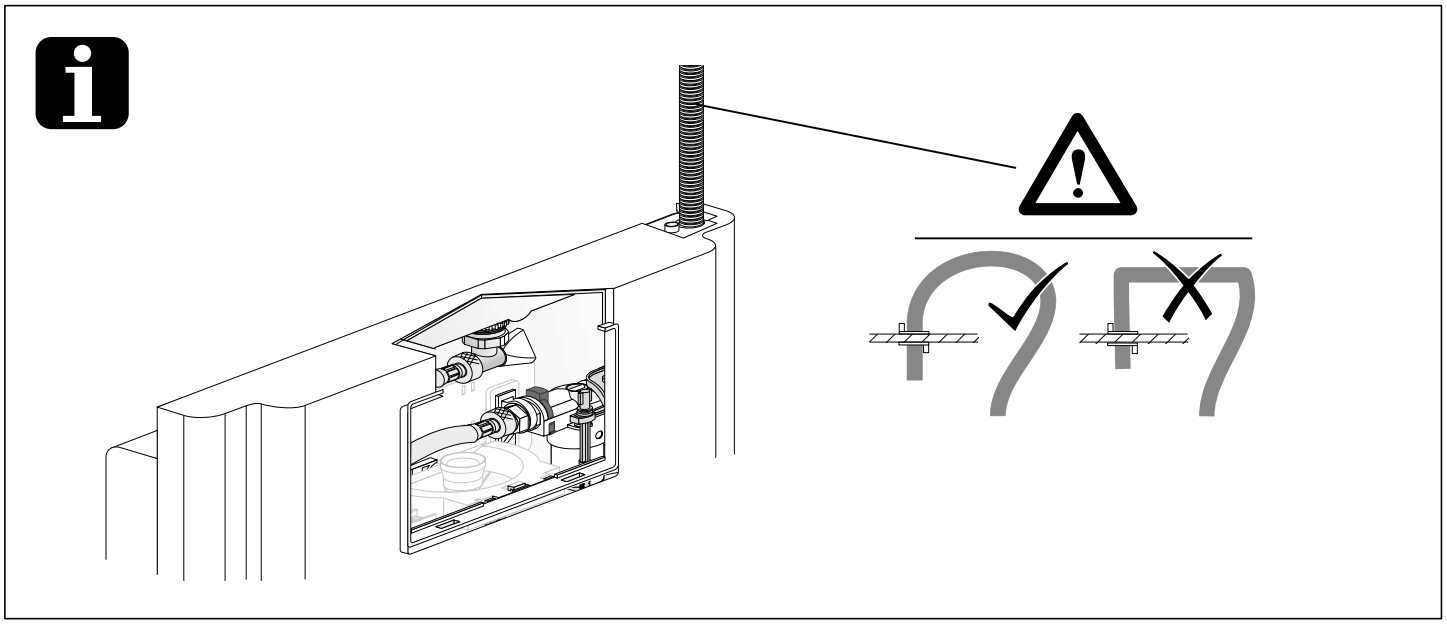

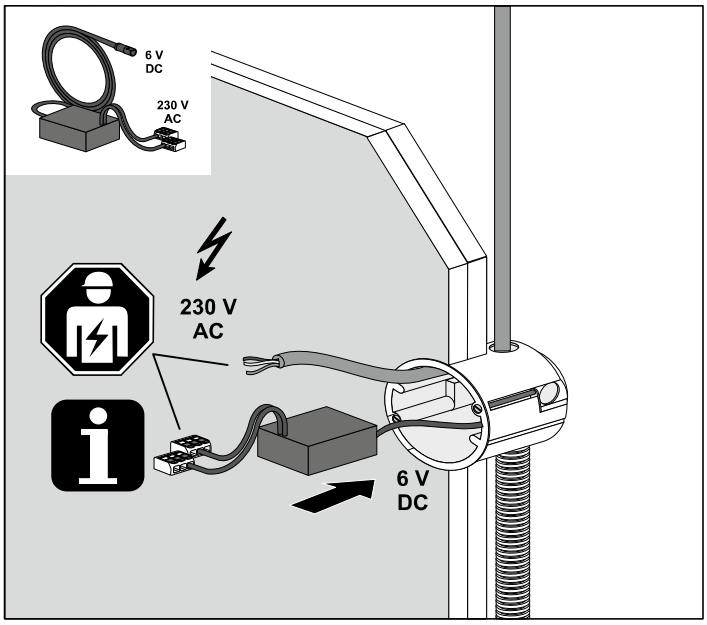
6 V
DC
230 V
AC
230 V
AC
6 V
DC

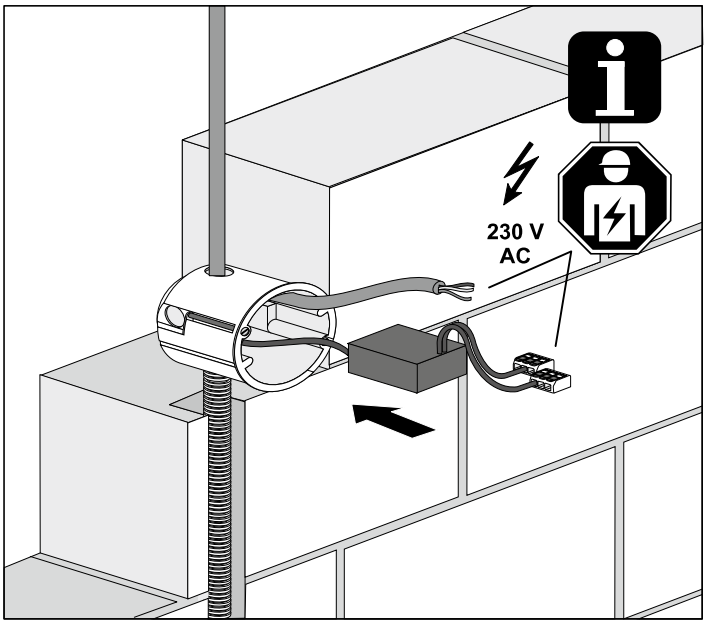
230 V
AC

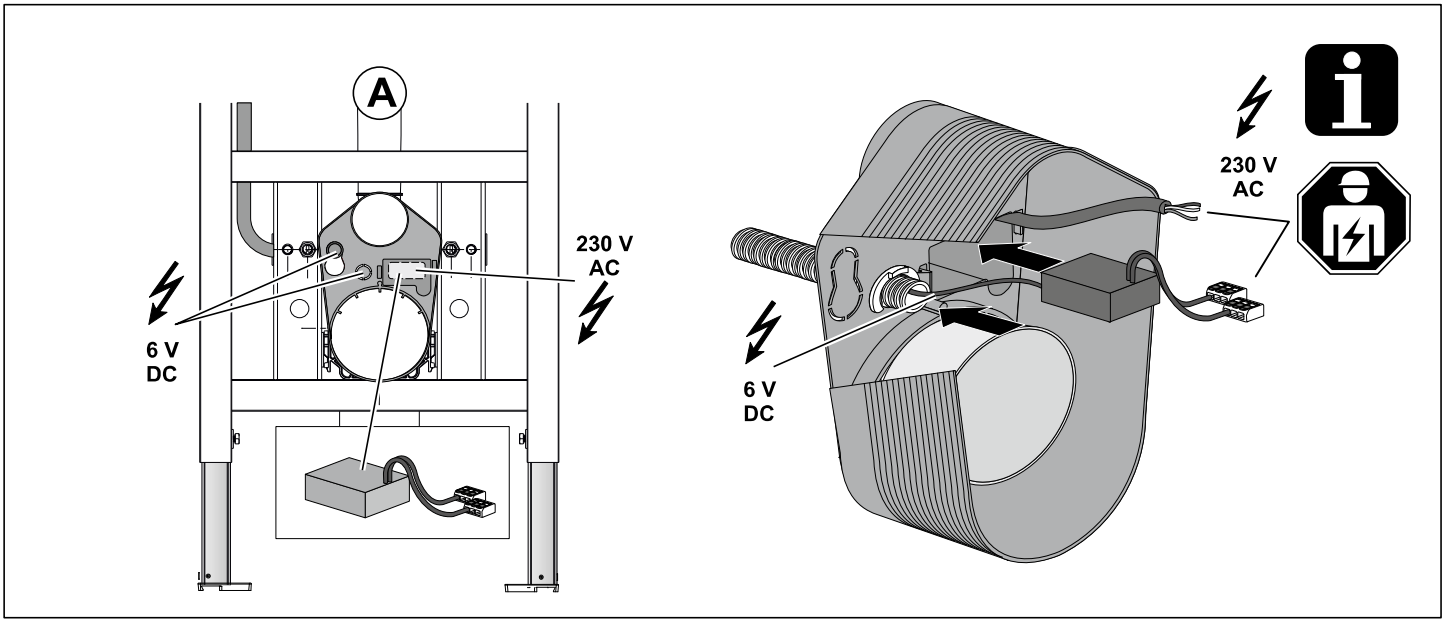
A
230 V
AC
6 V
DC
230 V
AC
6 V
DC

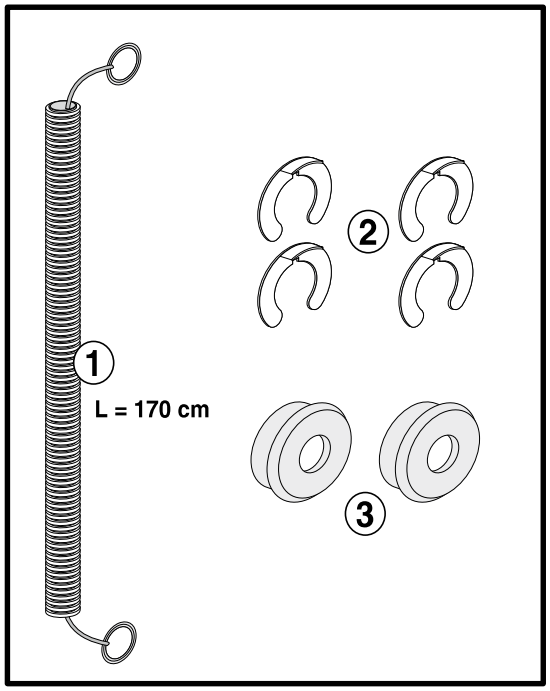
1
L = 170 cm
2
3

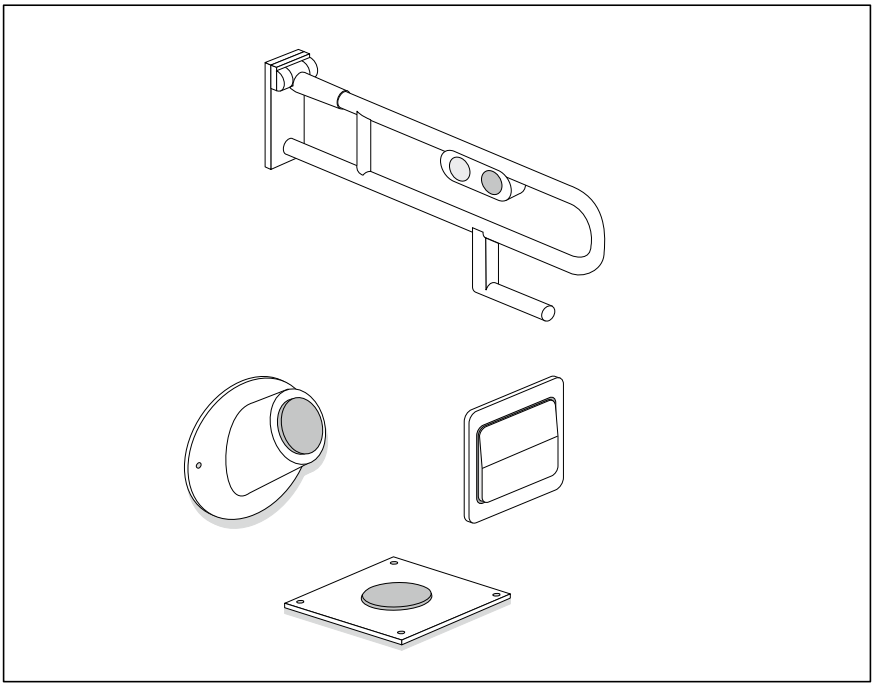

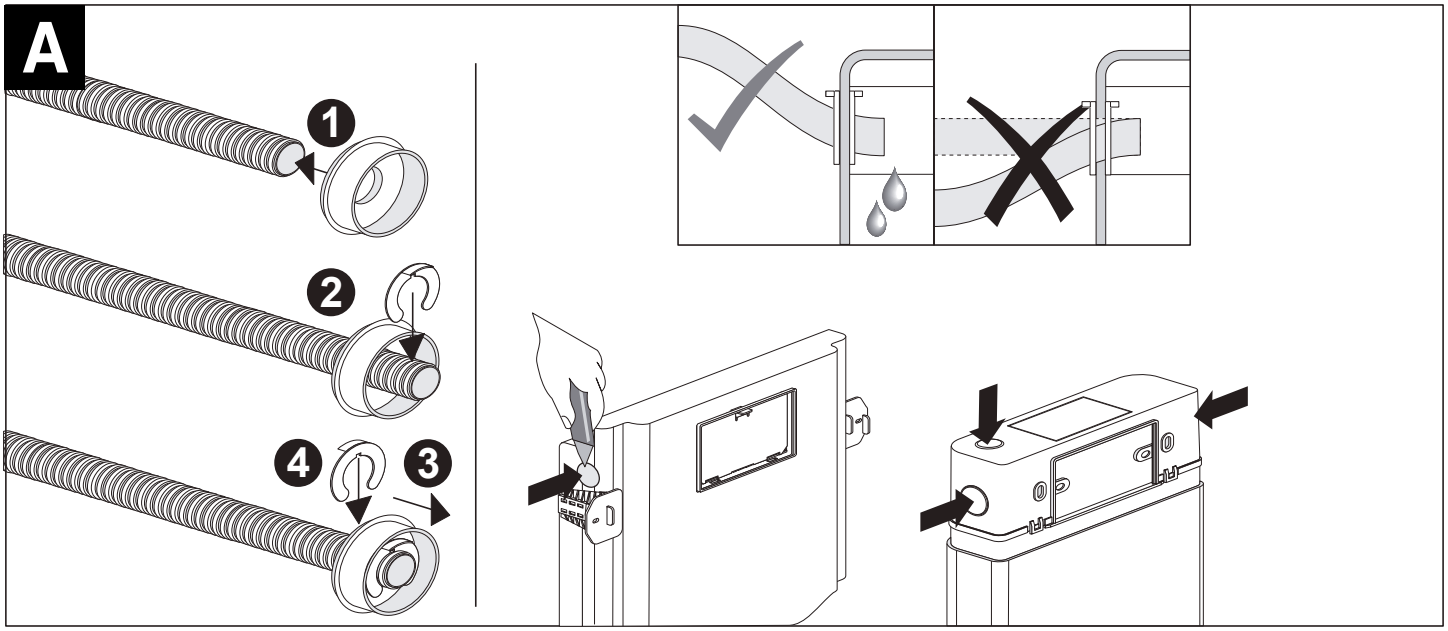
A
1
2
4
3

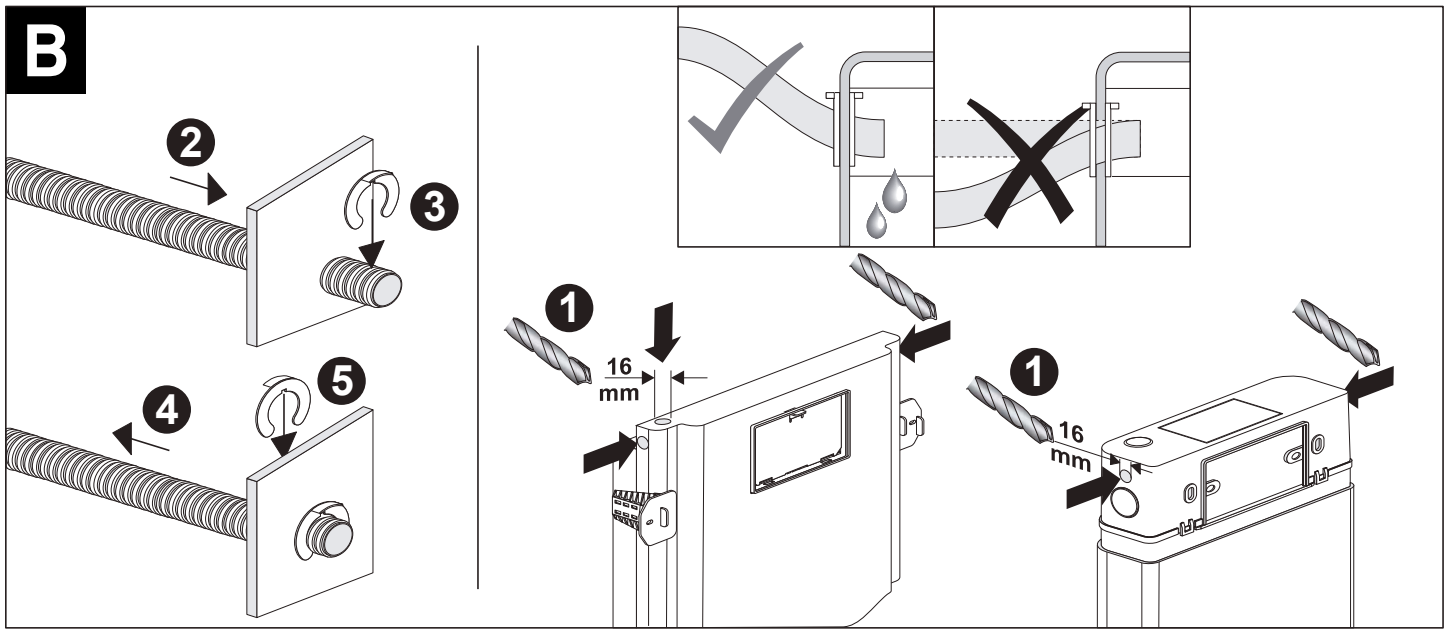
B
2
3
4
5
1
16
mm
1
16
mm

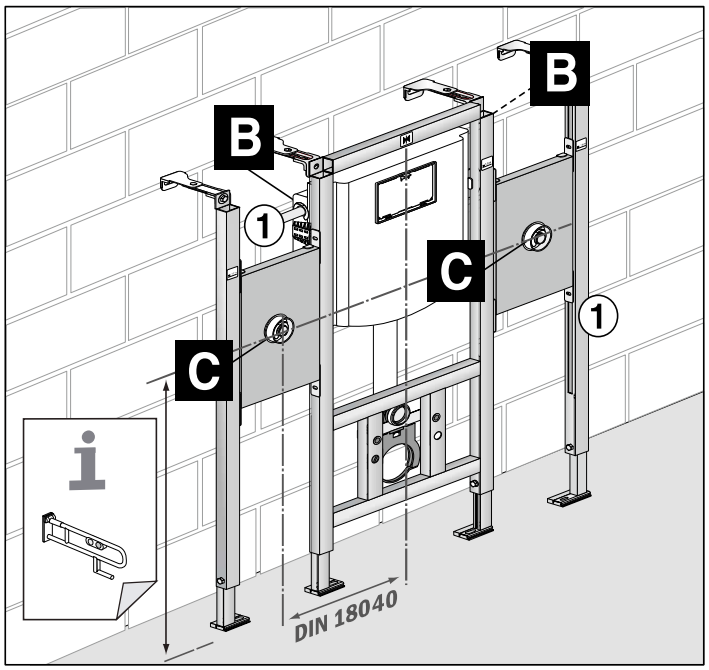
B
B
1
C
C
1
DIN 18040

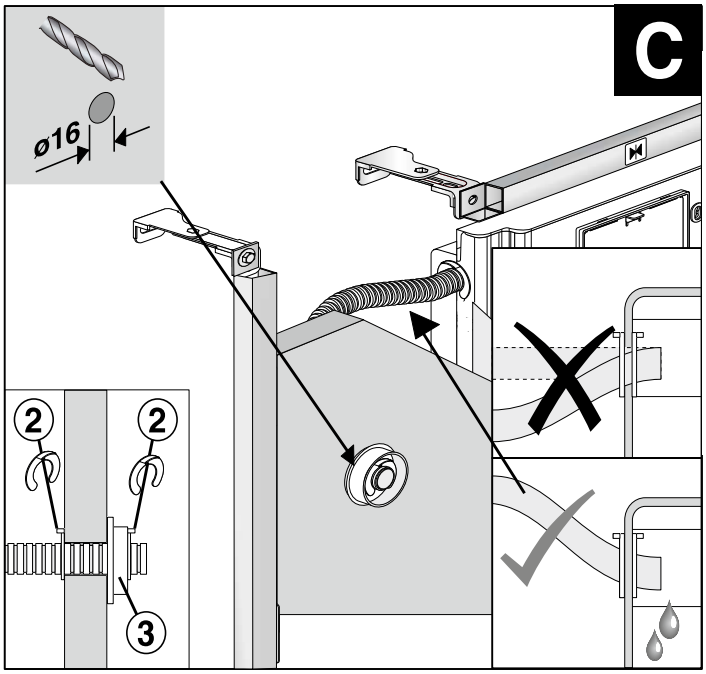
C
ø16
2
2
3

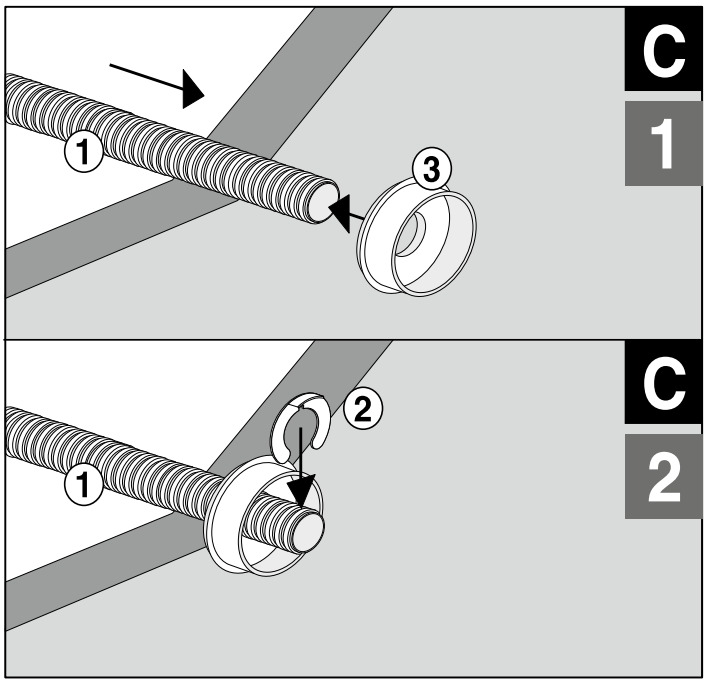
C
1
1
3
C
2
1
2

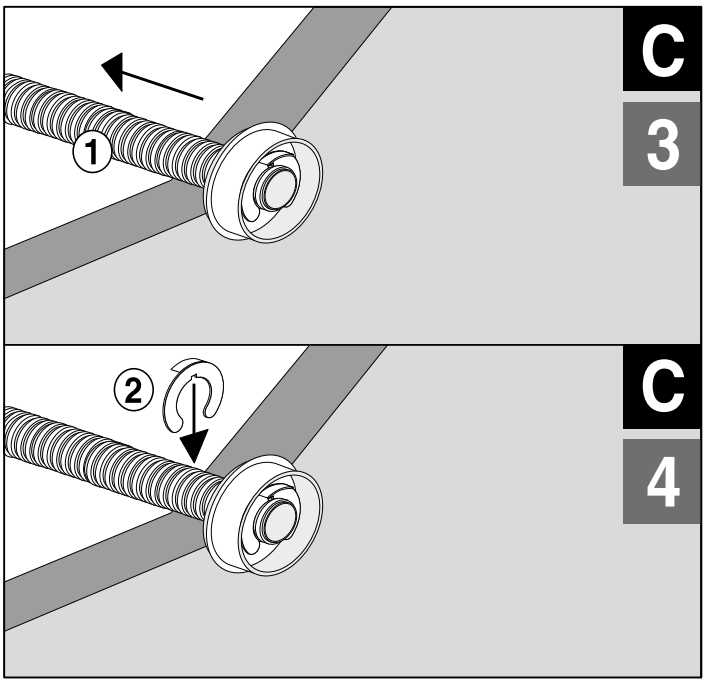
C
3
1
C
4
2

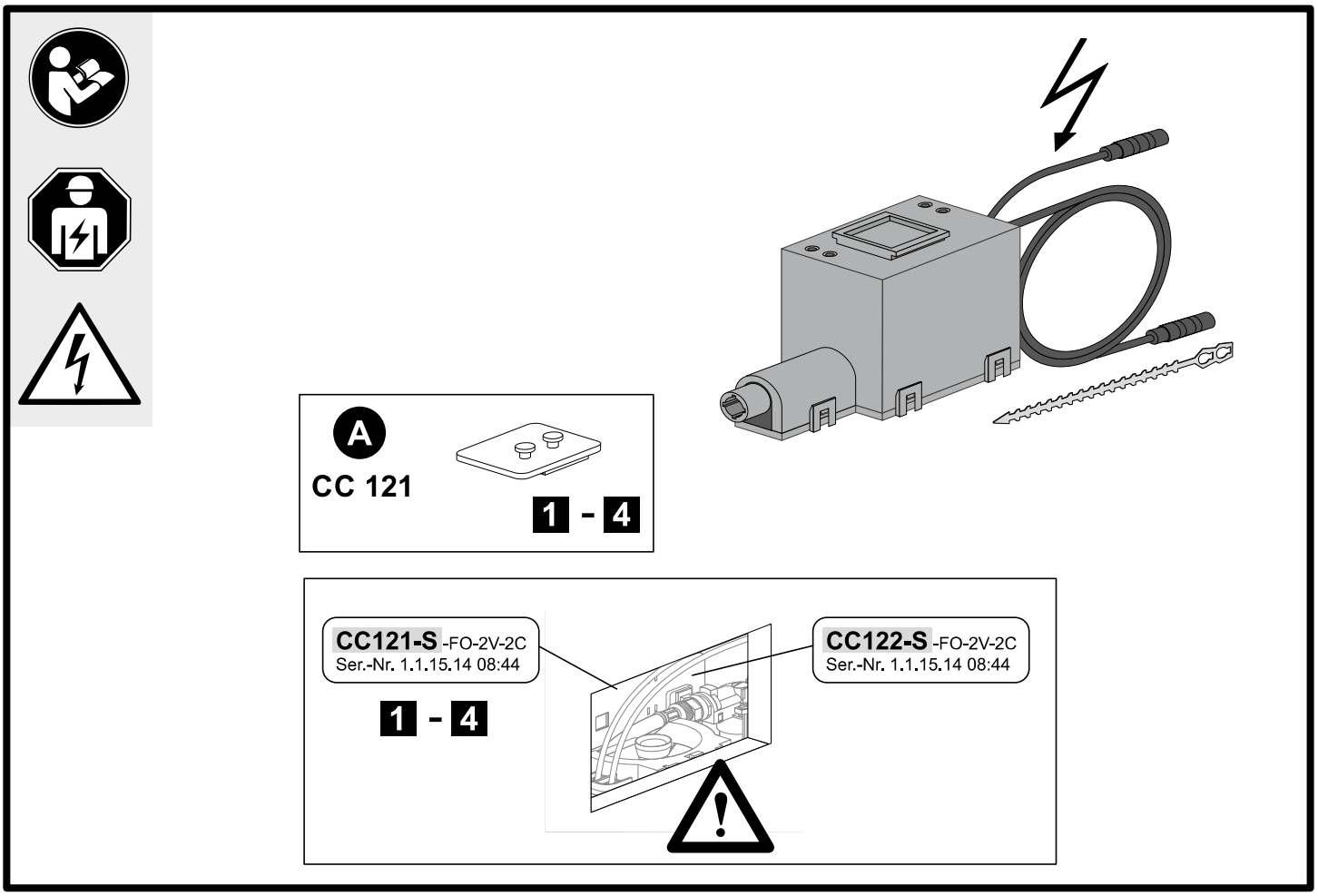
A
CC 121
1 - 4
CC121-S -FO-2V-2C
Ser.-Nr. 1.1.15.14 08:44
1 - 4
CC122-S -FO-2V-2C
Ser.-Nr. 1.1.15.14 08:44

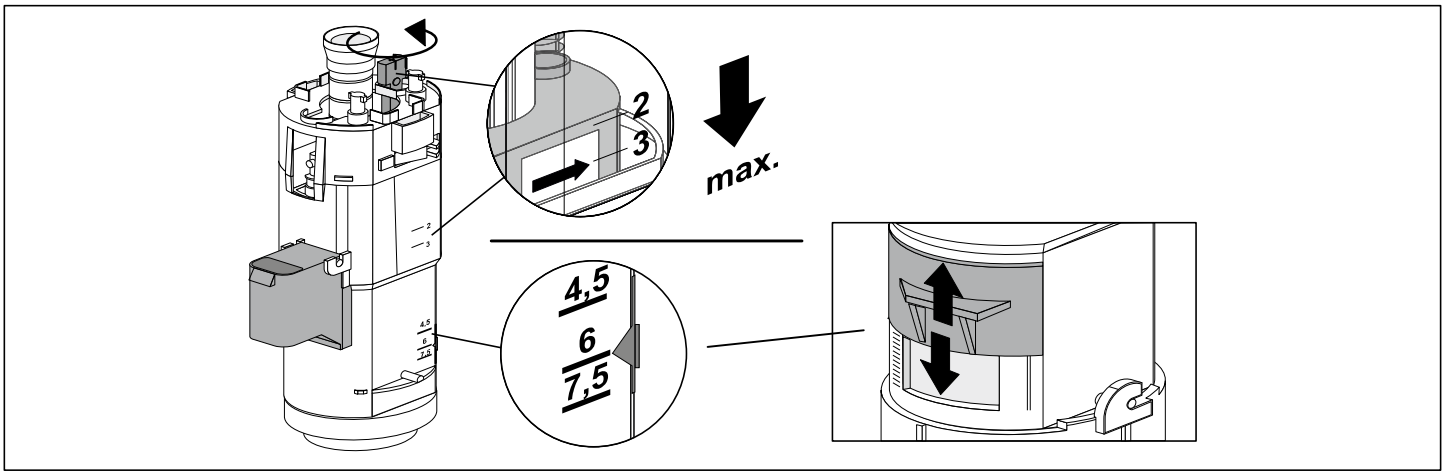
2
3
max.
4,5
6
7,5

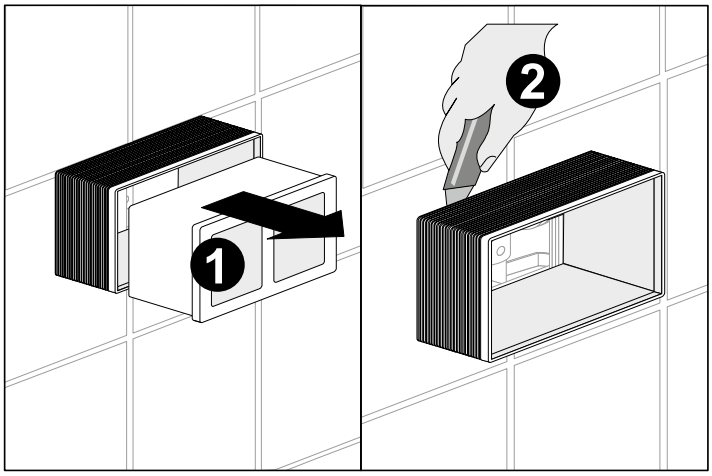
1
2

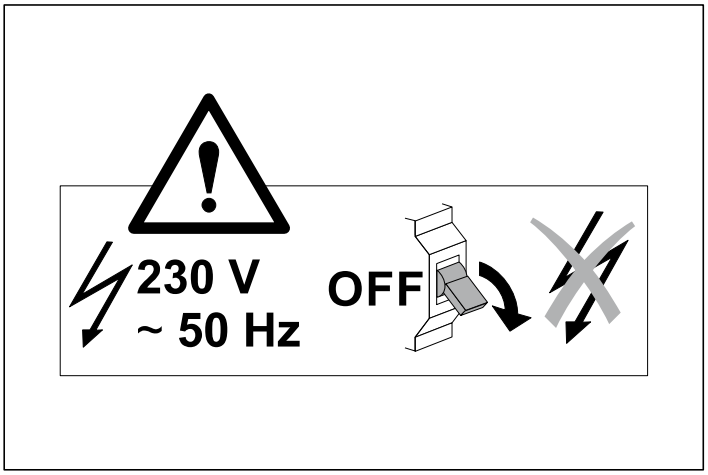
230 V
~ 50 Hz
OFF

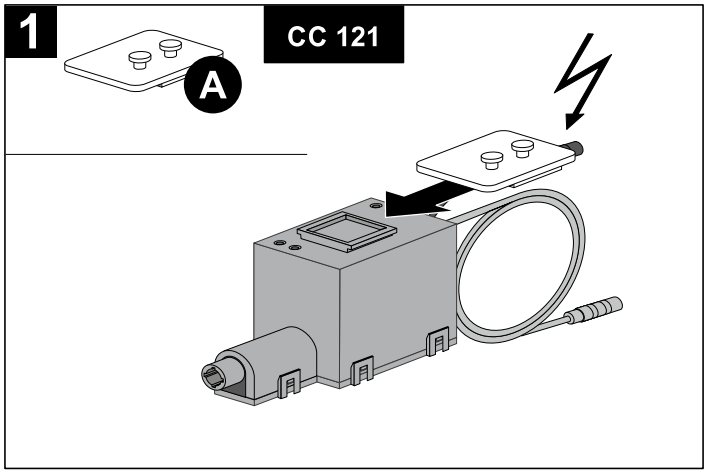
1
CC 121
A

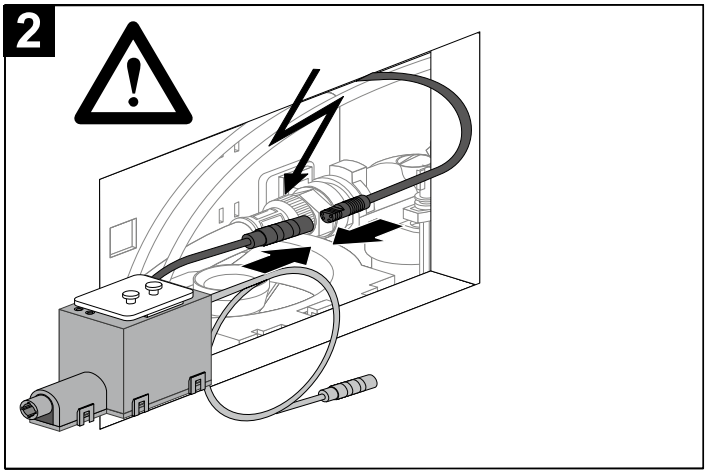
2

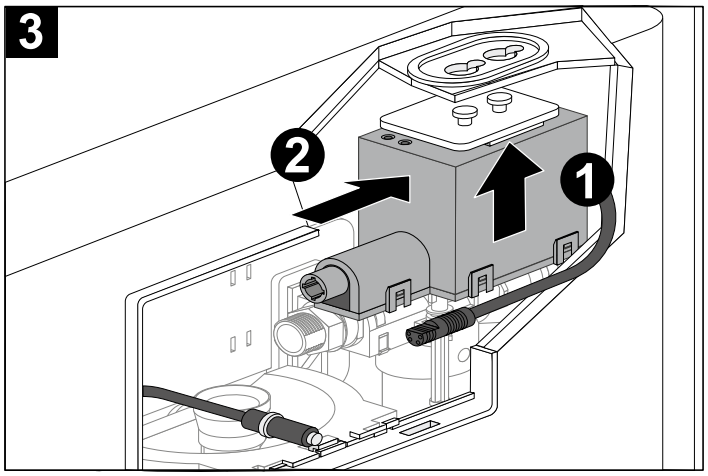
3
2
1

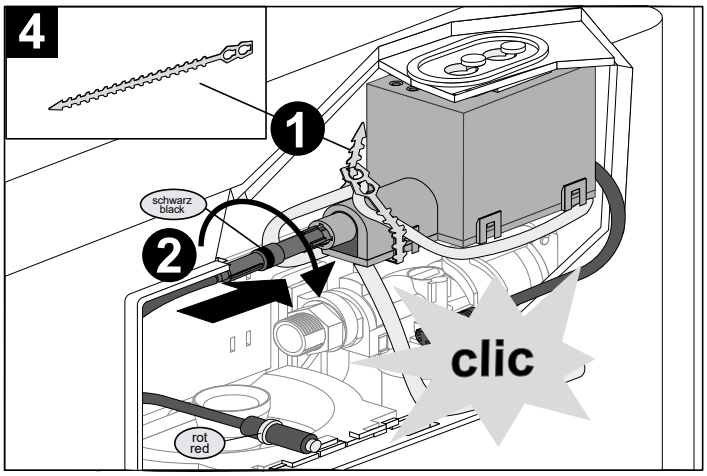
4
1
schwarz
black
2
clic
rot
red

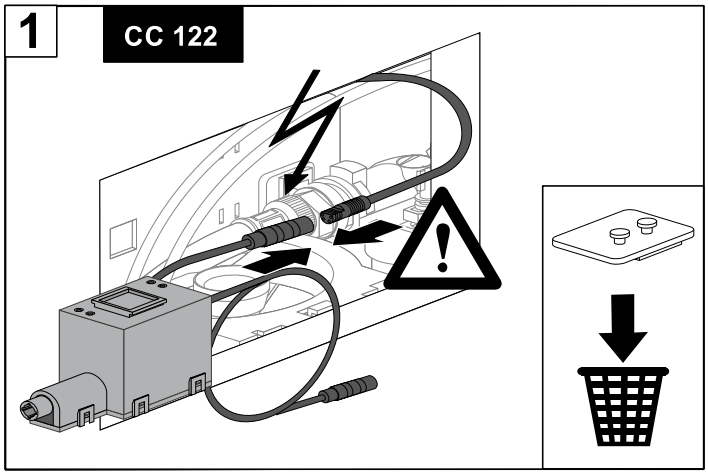
1
CC 122

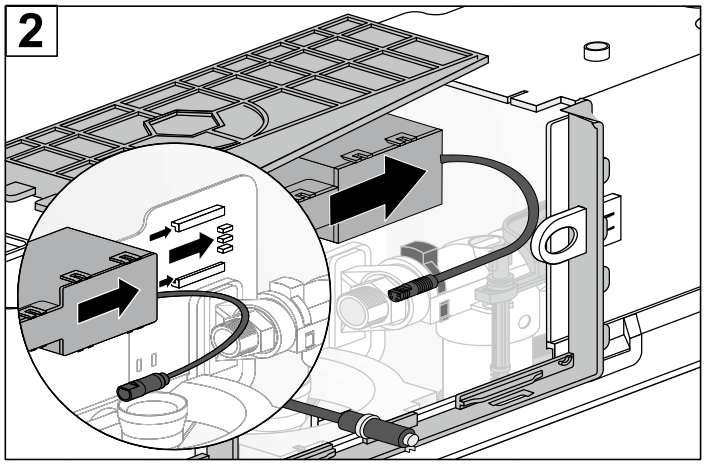
2

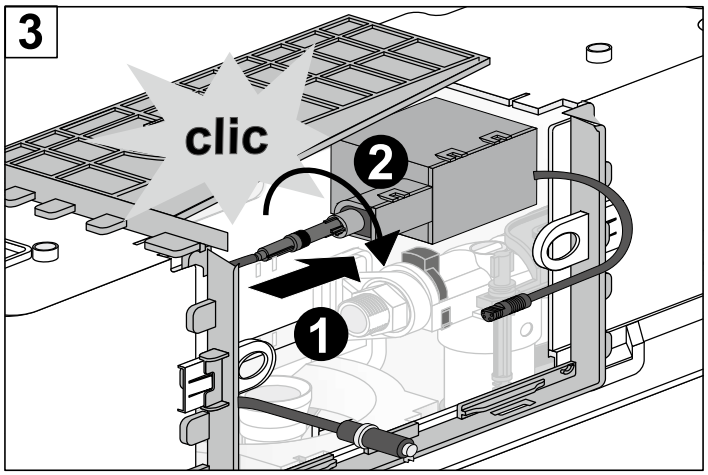
3
clic
2
1

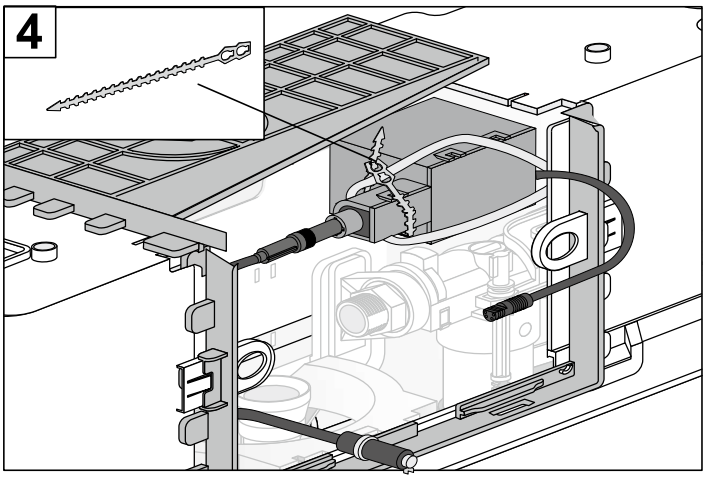
4

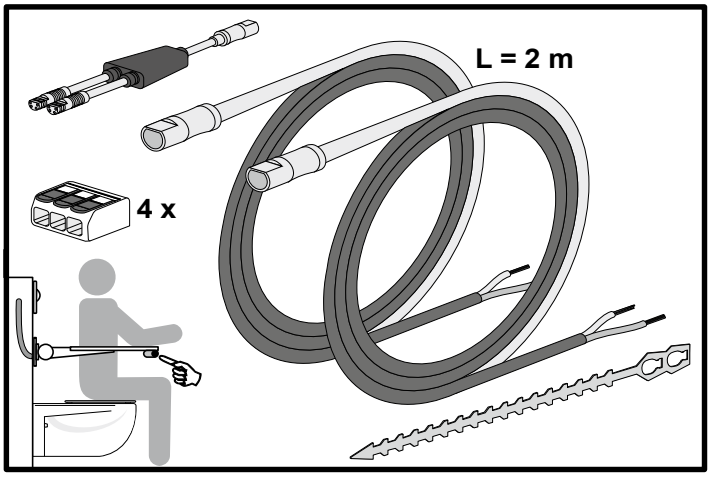
L = 2 m
4 x

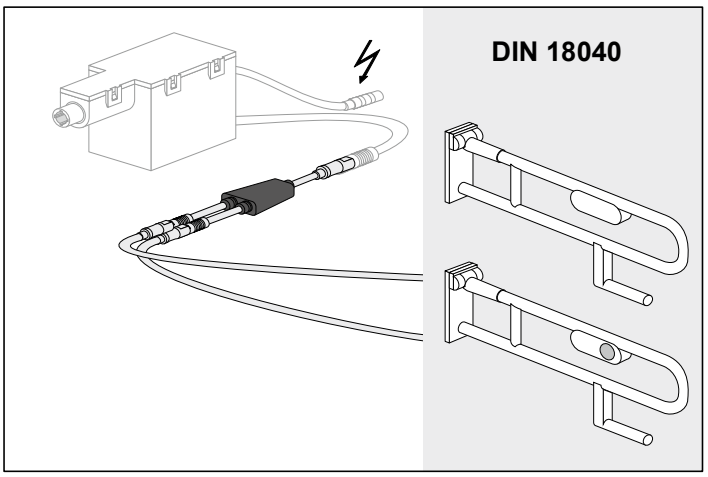
DIN 18040

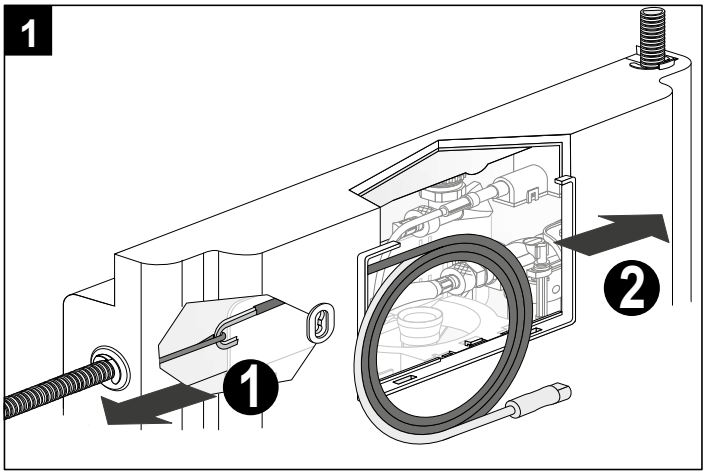
1
1
2

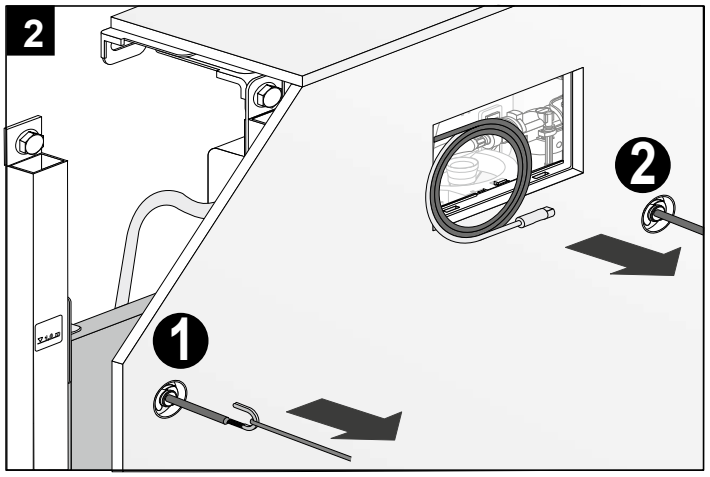
2
1
2

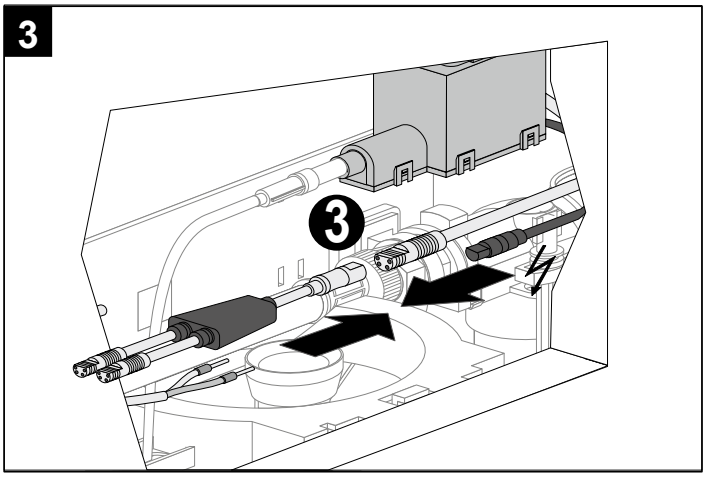
3
3

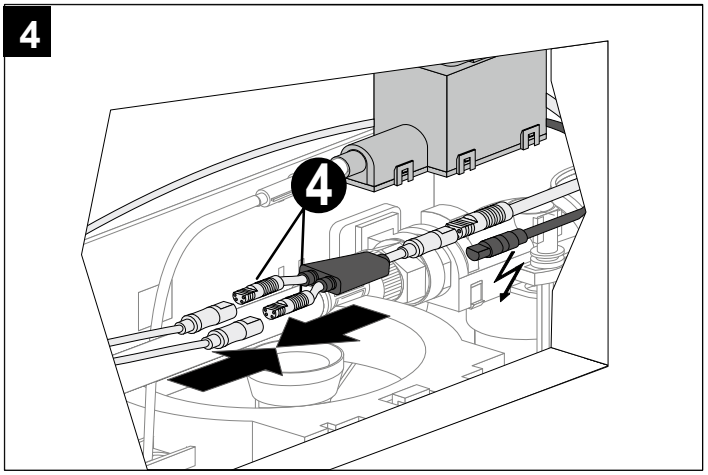
4
4

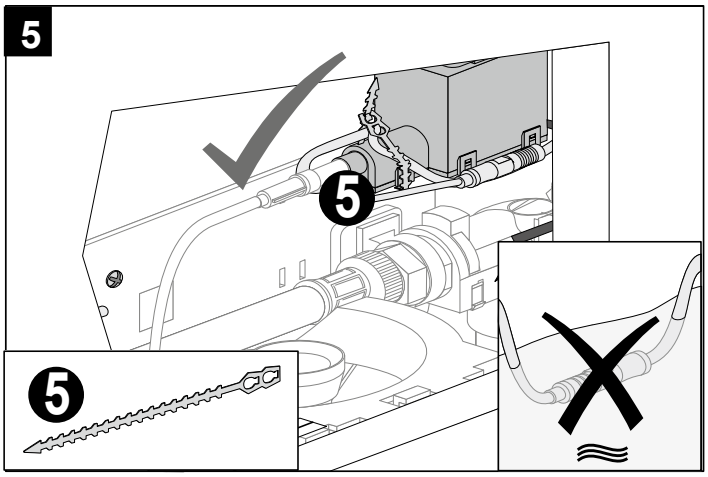
5
5
5

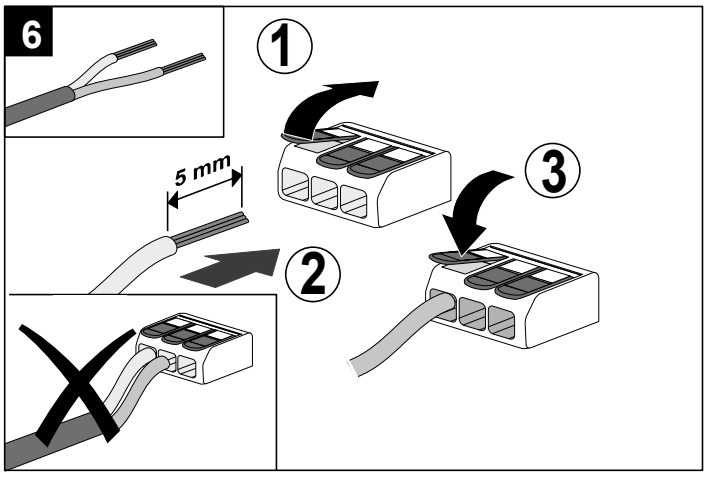
6
1
5 mm
2
3